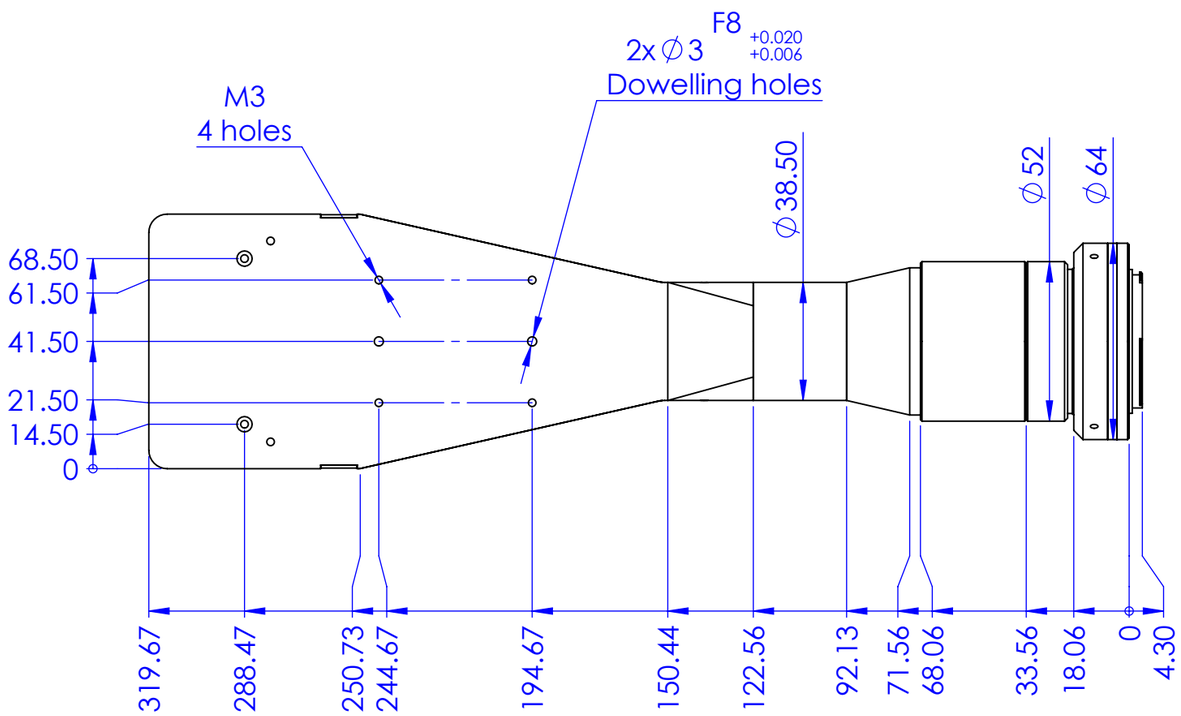

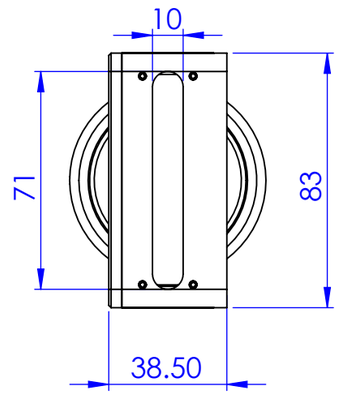

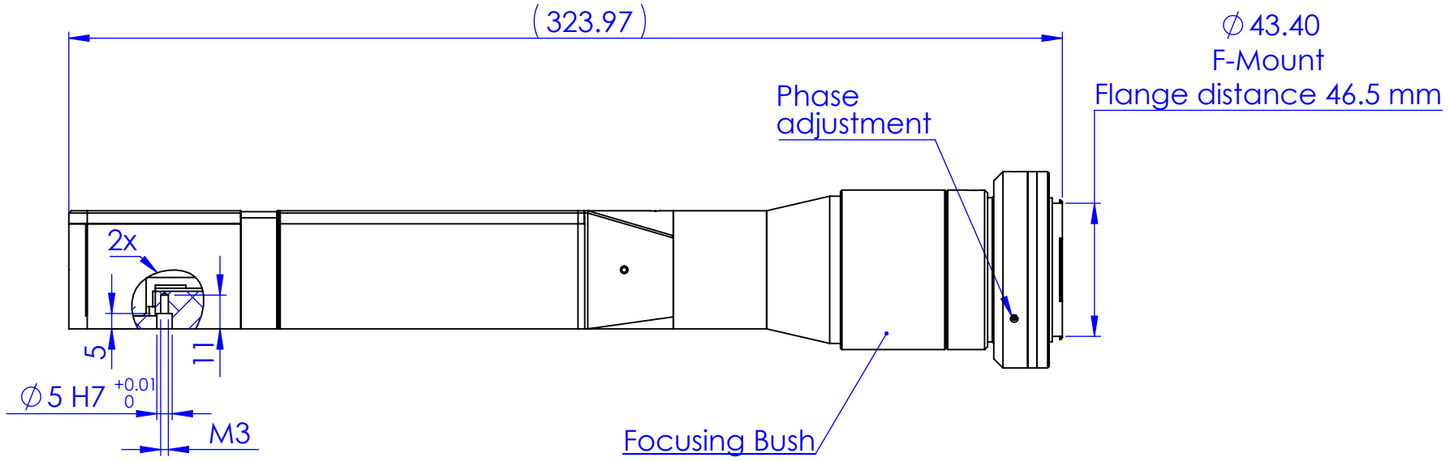

Material	N.A.	Mass	1272 g
Surface treatment	N.A.	Scale	1:2
Part No.	CO71524		

Geometrical tolerance (ISO 2768-2)	Class	K	Undimensioned bevels: 0.5x45°
Linear tolerance (ISO 2768-2)	Class	m	Undimensioned radii: R 0.5

0.5 ÷3	>3÷ 6	>6÷ 30	>30÷ 120	>120 ÷400	>400÷ 1000	>1000 ÷2000	>2000 ÷4000
±0.1	±0.1	±0.2	±0.3	±0.5	±0.8	±1.2	±2

all dimensions are in mm

Description: TC4K060-F

	Date	Name
Designed	16/04/2014	Santini
Drawn	23/05/2014	Rodella
Checked		

Drawing No. DP 71524-D

Sheet 1/1

OPTO ENGINEERING

OPTO ENGINEERING S.r.l. - Mantova, Italy - Tel. +39 0376699111 - www.opto-e.com

Secret and confidential - All rights reserved - No copy, dissemination or circulation is allowed unless specifically authorized in writing by OPTO ENGINEERING S.r.l. - Any violation shall be legally prosecuted.